MARK	DATE	UPDATE DESCRIPTION	SIGN	APPROVER
△				

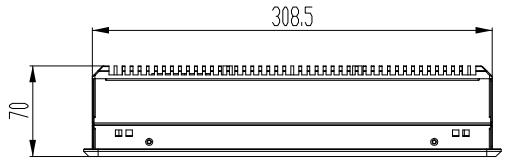

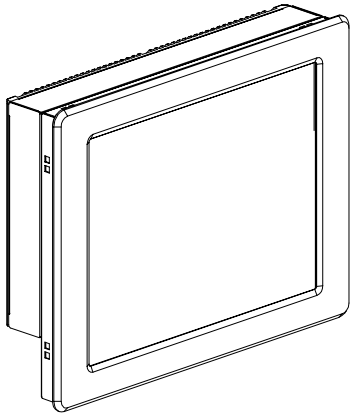

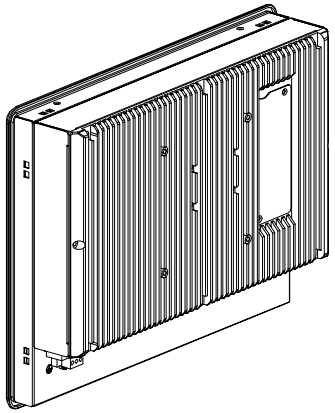

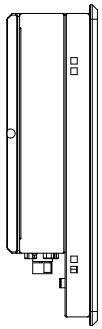

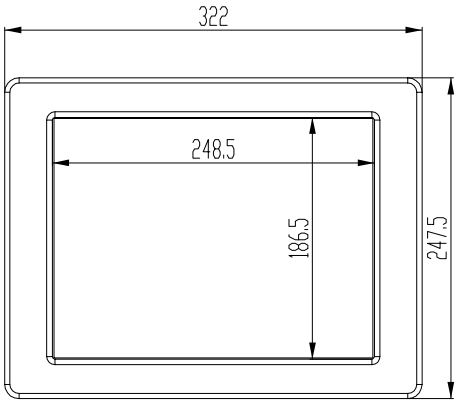

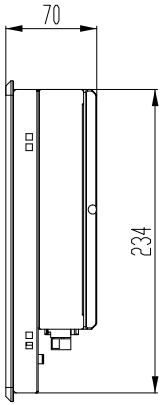

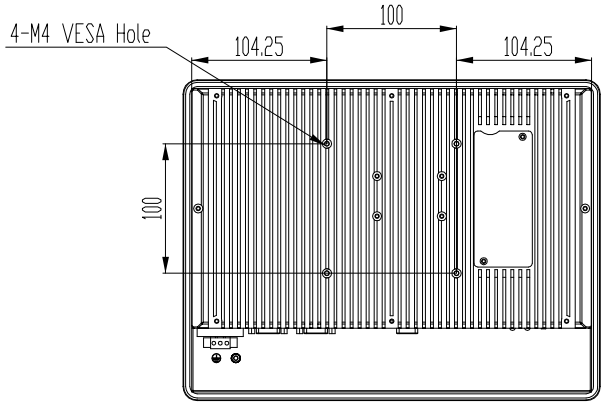

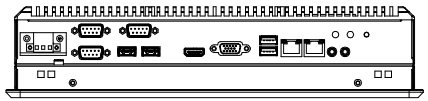

CUT OUT DIMENSION(310.5x236mm) UNIT:mm

* Note: this is a simplified drawing and some components are not marked in detail.
Please contact our sales representative if you need further product information.

Ver.	A0		FINISHING		
Q'ty	1		MATERIAL		
SELECT V	V				
DIM TOL	A	B	C	D	EXTRA
~8	±0.03	±0.05	±0.10	±0.20	
8~25	±0.05	±0.08	±0.20	±0.30	
25~80	±0.08	±0.12	±0.30	±0.40	
80~250	±0.12	±0.20	±0.40	±0.50	
250~	±0.20	±0.30	±0.50	±0.60	
ANGLE TOL	±0.2°	±0.3°	±0.4°	±0.5°	

3RD ANGLE'S	
APPROVED	
CHECKED	
DESIGNED	Jack
DATE	14-Oct-22

TITLE	FIPC-12510-2R-ASSY			
DRAWIN NO.	FIPC-12510-2R-3D3V.DWG			△
MODEL NO.	FIPC-12510-2R	SCALE	0.25	UNIT: MM
PART NO.	***	SIZE	A3	SHEET: 1 OF 1